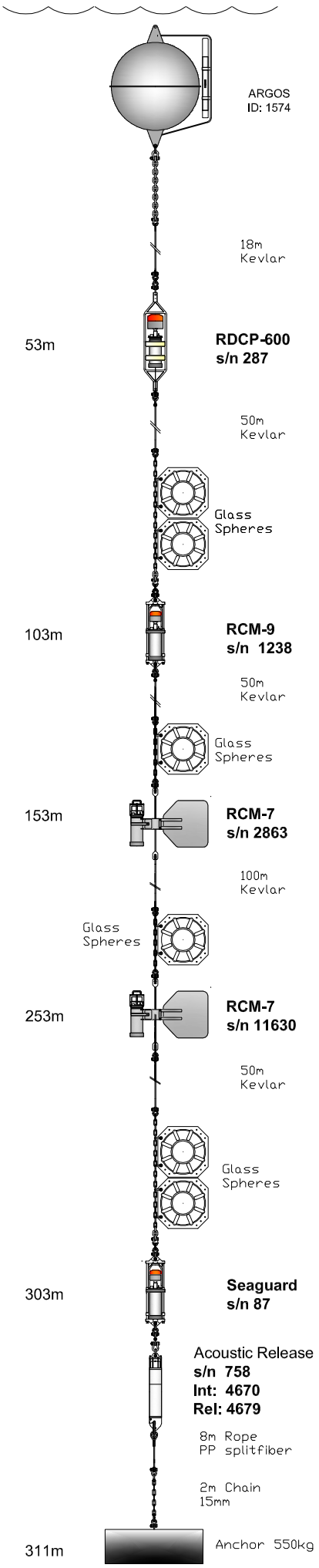

UNIVERSITETET I BERGEN
Geofysisk Institutt

Project: Undervisningstokt feb.2011

Location: Bømlafjorden

Position: N59 41.5 E 005 25.2

Depth: 311m

Deployment:

Recover:

Comments:

+ Seaguard lånt fra AADI

1	ARGOS - SMM 500
1	ARGOS - Bracket
1	ORE-37 Sub-Surface Float, buoyancy 316kg
1m	Chain 20mm steel galvanic
18m	11mm Kevlar Line
50m	11mm Kevlar Line
50m	11mm Kevlar Line
100m	11mm Kevlar Line
50m	11mm Kevlar Line
12	Shackle Red pin 1,5 t
3m	Chain 10mm steel galvanic
1	AADI RDCP-600
1	AADI Seaguard
1	AADI RCM-9
2	AADI RCM-7
5	VITROVEX 432mm Glass Spheres, Buoyancy 260 N
1	Acoustic Release Oceano
4	Shackle Red pin 3.25 t
1	S10 Frekhaug stainless steel, ring for release
1	Kause 18mm steel galvanic
1	Kause 18mm (POM Gl)
4m	Rope Polypropylen 20mm
8	Shackle Red pin 2 t
3m	Chain 15mm steel galvanic
1	Anchor Steel 550kg wet weight