K1

S
00
05

,
32

Spheres,

UNIVERSITETET I BERGEN
Geofysisk Institutt

Project:	Kongsfjorden
Location:	K1
Position:	N 78 58.40 E 011 57.591
Depth:	220m
Deployment:	2008.09.13. kl.08.00
Recover:	2009.09.12. kl.17.15

Comments: DSU-klokke sinket med
-10, -13, -13min

marine fouling on 11092

K1

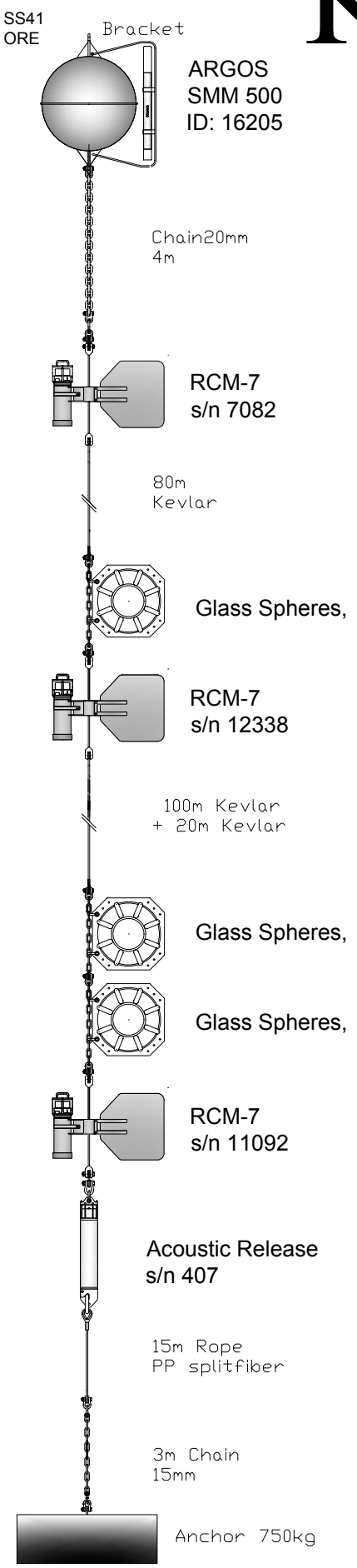

UNIVERSITETET I BERGEN
Geofysisk Institutt

Project:	Kongsfjorden
Location:	K1
Position:	N 78 58.40 E 011 57.591
Depth:	220m
Deployment:	2008.09.13. kl.08.00
Recover:	2009.09.12. kl.17.15

Comments: DSU-klokke sinket med
-10, -13, -13min

marine fouling on 11092

1	ARGOS - SMM 500
1	ARGOS - Bracket
1	SS28 ORE Sub-Surface Float, Buoyancy 133kg
5m	Chain 20mm steel galvanic
50m	11mm Kevlar Line
100m	11mm Kevlar Line
20m	11mm Kevlar Line
12	Shackle Red pin 1,5 t
3m	Chain 10mm steel galvanic
3	AADI RCM-7 / 3 - Vane / 3 - Band
	VITROVEX 432mm Glass Spheres, Buoyancy 260 N
1	Acoustic Release Oceano
4	Shackle Red pin 3.25 t
1	S10 Frekhaug stainless steel, ring for release
1	Kause 18mm steel galvanic
1	Kause 18mm (POM GI)
15m	Rope Polypropylen 20mm 6m
8	Shackle Red pin 2 t
3m	Chain 15mm steel galvanic
1	Anchor Steel 300kg wet weight